PROXXON

TBM220

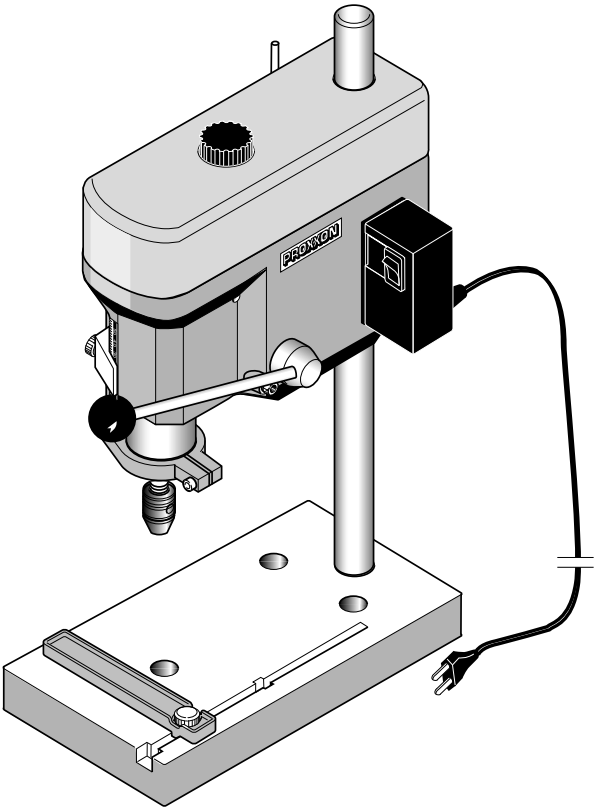

Manual

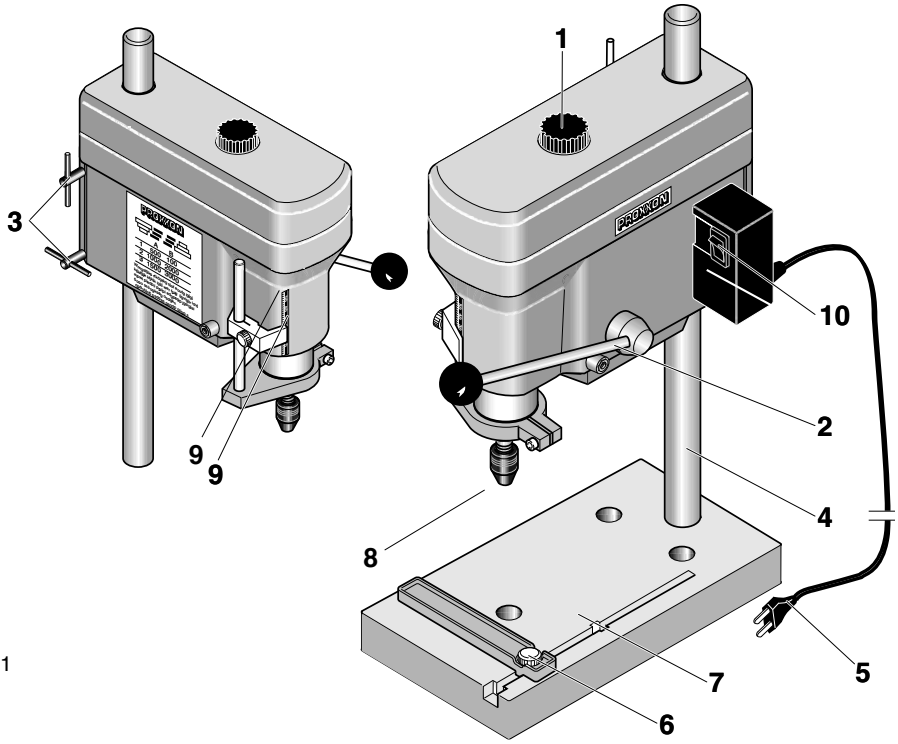

Fig. 1

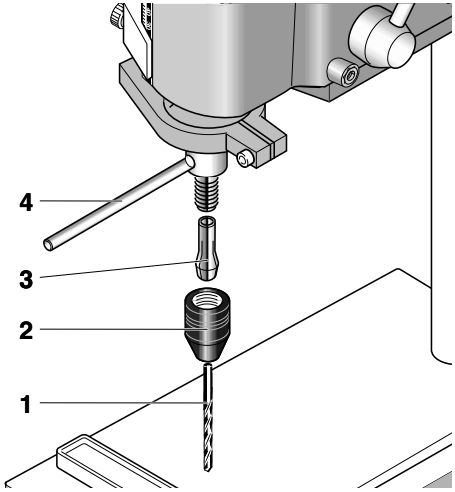

Fig. 2

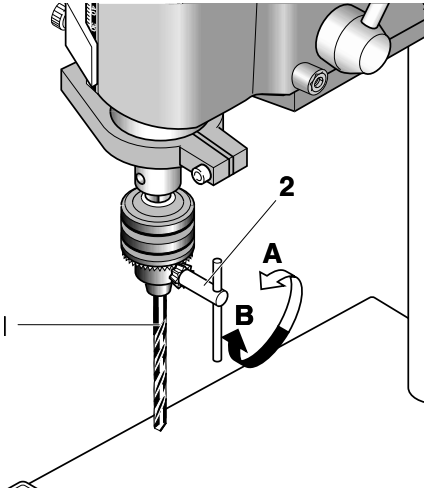

Fig. 3

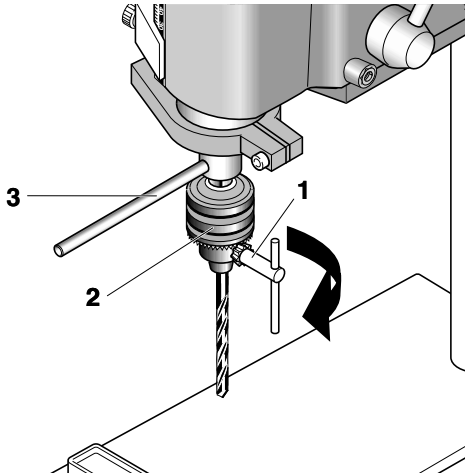

Fig. 4

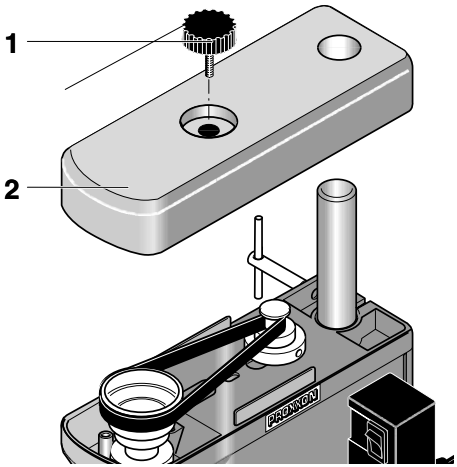

Fig. 5

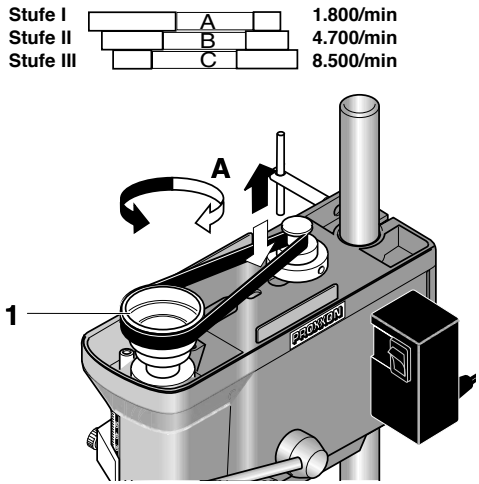

Fig. 6

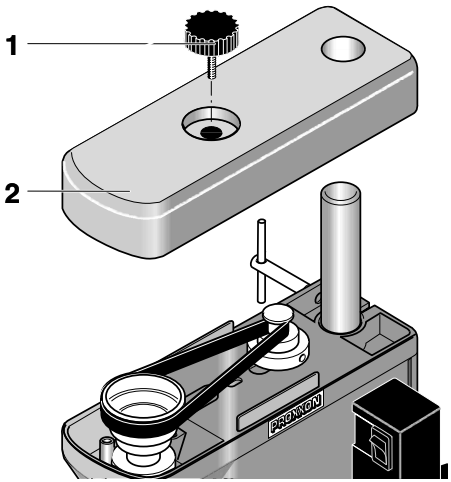

Fig. 7

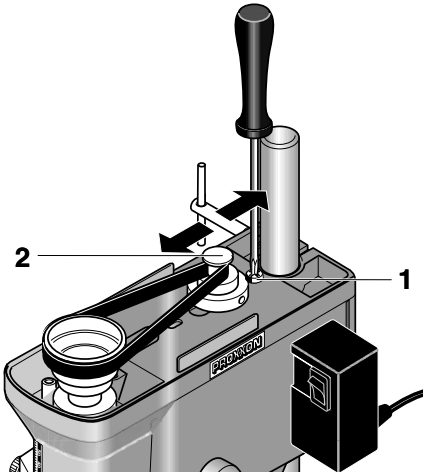

Fig. 8

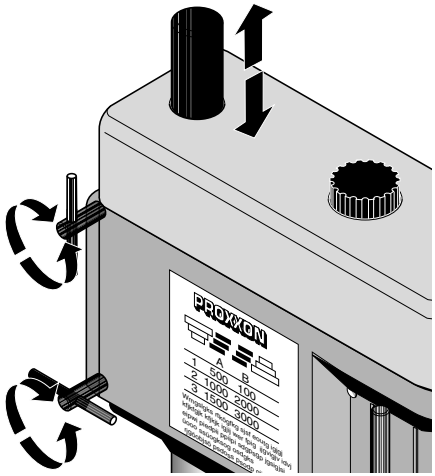

Fig. 9

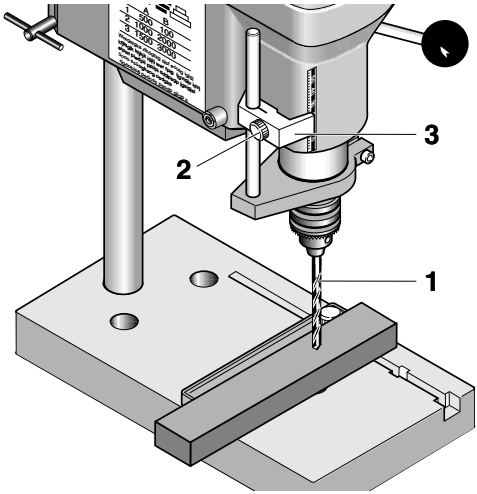

Fig. 10

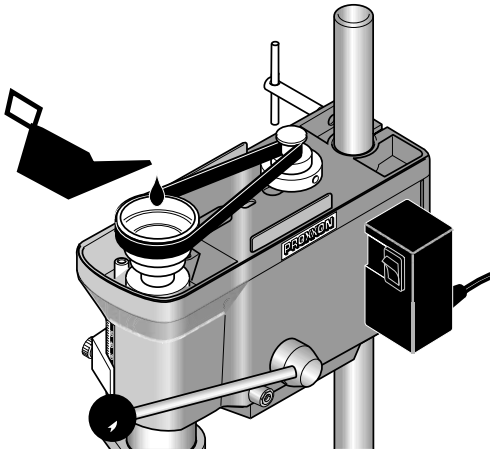

Fig. 11

(GB) *Translation of the Original Operating Instructions*

Foreword

Dear customer!

The PROXXON Bench drill TBM 220 is a precisely working and powerful machine.

This manual comprises:

- safety regulations
- operating instructions and
- spare parts list.

Please note!

Using this manual will

- **help you** to understand the machine,
- **avoid** malfunctions caused by faulty operation,
- **increase** the lifetime of the machine.

Always keep this manual close at hand.

Do not operate the equipment unless you are fully familiar with it. Follow the instructions.

PROXXON will not assume liability for safe functioning

- if the unit is used in a way that does not comply with the usual modes of operation,
- if it is used for purposes other than those mentioned in this manual,
- if the safety regulations are not observed.

No warranty claims can be lodged for damage resulting from

- operating errors,
- insufficient maintenance.

Please observe the safety regulations for your own safety.

Use only genuine PROXXON spare parts.

We reserve the right for technical modifications without prior notification.

We wish you much success with your new machine.

Safety regulations

Attention !

Read all safety warnings and instructions. Failure to follow all safety warnings and instructions listed below may result in electric shock, fire and/or serious injury.
KEEP ALL SAFETY WARNINGS AND INSTRUCTIONS FOR THE FUTURE !

- Keep the working area clean and tidy.
- Do not wear any loose clothes or jewellery.
- Do not work with the machine if you are not feeling well, if you are tired or not concentrated or if you are under the influence of alcohol.
- Do not use electrical tools in rain, under wet conditions or in the vicinity of inflammable liquids or gases.
- Protect the power cable against heat and being cut.
- Before starting to work fasten the drill bench to a solid work top.
- Clamp and fasten the work piece securely.
- Before starting to work check the machine for any obvious faults. Replace damaged parts.
- Keep children away from the working area.
- Wear protective goggles.
- Do not overload the machine.
- Store the machine in a locked up room out of the reach of children when not in use.
- Replace blunt tools.
- Clean the machine thoroughly after work.
- Remove drilling and milling chips only with hand broom or a brush.
- Do not brake the drilling spindle with your hand.
- Always disconnect the power cable if the machine is not in use, when changing tools or in case of repairs.
- Repairs in the electrical system should only be carried out by an electrician.
- Use only accessories and spare parts which are mentioned in this manual or which are recommended by the manufacturer.

Legend

1 Fastening screw for machine cover
2 Drill feed lever
3 Handle screw for height adjustment
4 Drill column
5 Power cable
6 Adjustable stop
7 Drill table
8 Spigot nut
9 Depth scale
10 ON-OFF switch

Description of the machine

The PROXXON - bench drill TBM 220 is an ideal machine for high precision drilling work.

This machine offers:

- Precisely machined work table made of high quality, aluminium die cast with reinforcement webs.
- Fixed stop with scale.
- Strong, chromium coated steel column.
- Treble torque in the low speed range.
- Drilling spindle running in three high quality precision ball bearings without any clearance.
- Spindle end suitable for clamping jaws or 38" drill chuck.

Technical data

Dimensions

Throat (inner face of column to middle of drill chuck)	140 mm
max. space table surface - spindle end	140 mm
Quill feed	30 mm
Motor	
Voltage:	230 V, 50/60 Hz
Power:	85 Watt KB 10 min
Idle speed of spindle:	1.800, 4.700, 8.500 rpm
Noise development:	≤ 70 dB (A)
General measuring uncertainty	K=3 dB

Noise/vibration information

The information on vibration and noise emission has been determined in compliance with the prescribed standardised and normative measuring methods and can be used to compare electrical devices and tools with each other.

These values also allow a preliminary evaluation of the loads caused by vibration and noise emissions.

Warning!

Depending on the operating conditions while operating the device, the actually occurring emissions could differ from the values specified above!

Please bear in mind that the vibration and noise emission can deviate from the values given in these instructions, depending on the conditions of use of the tool. Poorly maintained tools, inappropriate working methods, different work pieces, too high a feed or unsuitable work pieces or materials or unsuitable bits and cutters (here: saw blade) can significantly increase the vibration load and noise emission across the entire work period.

To more accurately estimate the actual vibration and noise load, also take the times into consideration where the device is switched off, or is running but is not actually in use. This can clearly reduce the vibration and noise load across the entire work period.

Warning:

- Ensure regular and proper maintenance of your tool
- Stop operation of the tool immediately if excessive vibration occurs!
- Unsuitable bits and cutters can cause excessive vibration and noises. Only use suitable bits and cutters!
- Take breaks if necessary when working with the device!

Accessories

Clamping jaws for1,0/1,5/2,0/2,4/3,0 and 3,2 mm shanks

For use in dry environments only 

Protection class II device 

Please do not dispose off the machine! 

Operation

Before operation

Fasten the machine securely on a strong base.

Clamping, changing the tool

Attention!

Pull the mains plug out before changing tools.

Tightening the spigot nut without inserting a suitable shank will damage the clamping jaw.

1. Insert the pin 4 (Fig. 2) into the bore and block the spindle.
2. Unscrew the spigot nut (2).
3. Insert the required clamping jaw (3) with the appropriate tool (1) and retighten the spigot nut.

Note:

Clamp all tools as short as possible. Extremely protruding shanks will bend and cause eccentric rotation.

Clamping, changing tools with the drill chuck (not included)

Attention!

Pull the mains plug out when changing tools.

1. Insert the drill chuck key 2 (Fig. 3) into the drill chuck (1).
2. Turn the drill chuck key in direction "A" to open the drill chuck.
3. Insert the tool into the drill chuck until it bottoms.
4. Turn the drill chuck key in direction "B" to close the drill chuck and to clamp the tool.

Removing and installing the drill chuck

Note:

This must be done to install the clamping jaws.

Attention!

Pull the mains plug out beforehand.

1. Insert the pin 3 (Fig. 4) into the bore and block the spindle.
2. Insert the drill chuck key (1) and unscrew or tighten the drill chuck. (2).

Adjusting the spindle speed

Attention!

Pull the mains plug out beforehand.

Do not use the machine without protective covering.

Note:

High performance is not achieved by high feeding speed, but correct and uniform rotary speed.

Belt position "A" = 1.800 rpm

Belt position "B" = 4.700 rpm

Belt position "C" = 8.500 rpm

small drill Ø = high speed

big drill Ø = low speed.

1. Unscrew the knurled screw 1 (Fig. 5) and lift the cover (2) off.

Attention!

Work careful to avoid damage to the belt.

2. Turn the belt pulley 1 (Fig. 6) in direction "A" and press the belt slightly down (or up) until it comes loose.
3. Place the loose belt first on the required pulley (1) then turn the spindle and force the belt on the corresponding disc on the motor spindle.
4. Reinstall the cover.

Adjusting the belt tension

Attention!

Pull the mains plug out beforehand.

Do not use the machine without the protective cover.

1. Unscrew the knurled screw 1 (Fig. 7) and lift the cover (2) off.

2. Loosen both fastening screws 1 (Fig. 8) and displace the motor spindle (2) until the required tension is achieved.

3. Retighten the fastening screws.

4. Reinstall the cover.

Note:

Tighten the belt only so far that the slippage is eliminated. A too tight belt will deform during a longer period of rest, which reduces the power of the motor.

Adjusting the distance between tool and work piece

Note:

Always adjust the initial position before starting work.

Perform this work after clamping work piece and drill.

1. Support the drill head with your hand against slipping down.

2. Loosen both handle screws (Fig. 9) and adjust the height of the drill head until the distance between drill and work piece is approx.
   2 to 5 mm.

3. Retighten the clamping screws.

Adjusting the depth stop

Note:

The working stroke of the quill is max. 30 mm. With the depth scale it can be limited downwards.

1. Use the drill feed lever to lower the quill until the drill 1 (Fig. 10) touches the work piece.

2. Loosen the clamping screw (2).

3. Adjust the scale pointer (3) to the required drilling depth (max. 30 mm) and retighten the clamping screw.

Maintenance

Attention!

Always pull the mains plug out before starting maintenance or cleaning work.

Lubricate the quille guide (Fig. 11) every 10 operating hours with a few drops of high quality machine oil.

After working with the machine remove all chips with a suitable hand broom or brush.

Clean the machine regularly with a cloth from all dirt.

If the machine is not going to be used for a longer period of time remove the drive belt to avoid deformation and erratic running.

Maintenance, cleaning and care

Attention!

Disconnect the mains plug prior to every adjustment, maintenance measure or repair!

Note:

Every device is dirtied by dust when working. Cleaning is therefore essential. To ensure a long service life, however, the machine should be cleaned with a soft cloth or brush after each use.
Mild soap or other suitable cleaning agent may be used in this context. Solvents or cleaning agents containing alcohol (e.g. petrol, cleaning alcohols, etc.) should be avoided, since these can attack plastic casings.

The apertures required for cooling the motor must always be kept free of dust and dirt.

Accessories

For more detailed information on accessories, please request our device catalogue from the address specified on the last page in the warranty information.

Please note in general:

Proxxon bits and cutters have been designed to work with our machines, which makes them optimal for their use.

We will not assume any liability whatsoever for the safe and proper function of our devices when using third-party bits and cutters!

Service note

Please note: The mains power input may only be replaced by our Proxxon Service Department or a qualified specialist!

EC Declaration of Conformity

Name and address of the manufacturer:
PROXXON S.A.
6-10, Härebierg
L-6868 Wecker

Product designation:	TBM 220
Article No.:	28128

In sole responsibility, we declare that this product conforms to the following directives and normative documents:

EU EMC Directive **2014/30/EU**
DIN EN 55014-1 / 05.2012
DIN EN 55014-2 / 01.2016
DIN EN 61000-3-2 / 03.2015
DIN EN 61000-3-3 / 03.2014

EU Machinery Directive **2006/42/EU**
DIN EN 62841-1 / 07.2016

Date: 10.08.2017

Dipl.-Ing. Jörg Wagner

PROXXON S.A.
Machine Safety Department

The CE document authorized agent is identical with the signatory.

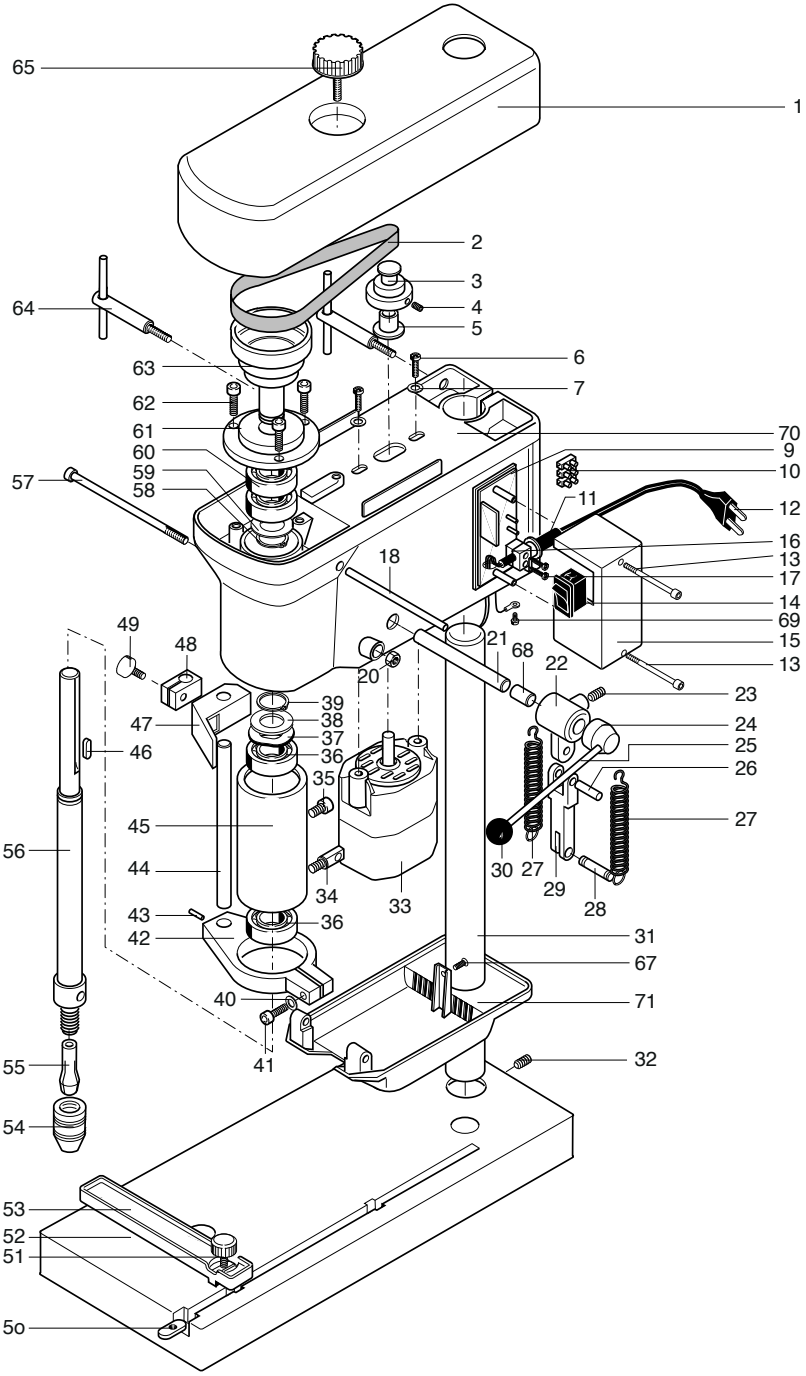
65
1
2
3
4
5
64
6
63
7
62
61
70
60
9
59
10
57
58
11
12
16
18
13
17
14
69
49
48
21
68
15
20
22
13
23
39
47
38
24
37
46
25
36
26
35
45
27
56
44
30
27
29
34
33
28
43
36
42
31
67
40
71
41
32
55
54
53
52
51
50

PROXXON TBM 220

ET-Nr.:	Description
28128-01	Cover
28128-02	Driving belt
28128-03	Motor belt pulley
28128-04	Set screw
28128-05	Bushing
28128-06	Motor mounting screw
28128-07	Washer
28128-09	Switch housing base
28128-10	Connecting clamp
28128-11	Anti-kink grommet
28128-12	Connection cable
28128-13	Fastening screw
28128-14	Machine switch
28128-15	Connection box
28128-16	Strain relief
28128-17	Screw
28128-18	Rod
28128-19	Circlip
28128-20	Nut
28128-21	Feed shaft
28128-22	Feed lever
28128-23	Set screw
28128-24	Connection
28128-25	Drill lever
28128-26	Pin
28128-27	Spring
28128-28	Pin
28128-29	Fork
28128-30	Ball head
28128-31	Steel column
28128-32	Set screw
28128-33	Motor
28128-34	Retaining screw
28128-35	Screw
28128-36	Ball bearing
28128-37	Corrugated washer
28128-38	Washer

ET-Nr.:	Description
28128-39	Circlip
28128-40	Washer
28128-39	Circlip
28128-40	Washer
28128-41	Screw
28128-42	Flange
28128-43	Pin
28128-44	Rod
28128-45	Mandrel
28128-46	Feather key
28128-47	Scale pointer
28128-48	Clamp
28128-49	Knurled screw
28128-50	Nut
28128-51	Knurled screw
28128-52	Drill table
28128-53	Stop
28128-54	Cap nut
28128-55	Collet
28128-56	Drill spindle
28128-57	Clampng screw
28128-58	Circlip
28128-59	Washer
28128-60	Ball bearing
28128-61	Flange
28128-62	Clamping bolt
28128-63	Pulley
28128-64	Toggle screw
28128-65	Knurled screw
28128-67	Screw
28128-68	Spacer bushing
28128-69	Screw
28128-70	Casing
28128-71	Lower housing cover
28128-99	Operating Instructions incl. Safety instructions

PROXXON

GB **Service note**

All PROXXON products are thoroughly inspected after production. Should a defect occur nevertheless, please contact the dealer from whom you purchased the product. Only the dealer is responsible for handling all legal warranty claims which refer exclusively to material and manufacturer error.

Improper use, such as capacity overload, damage due to outside influences and normal wear are excluded from the warranty.

You will find further notes regarding "Service and Spare Parts Management" at www.proxxon.com.